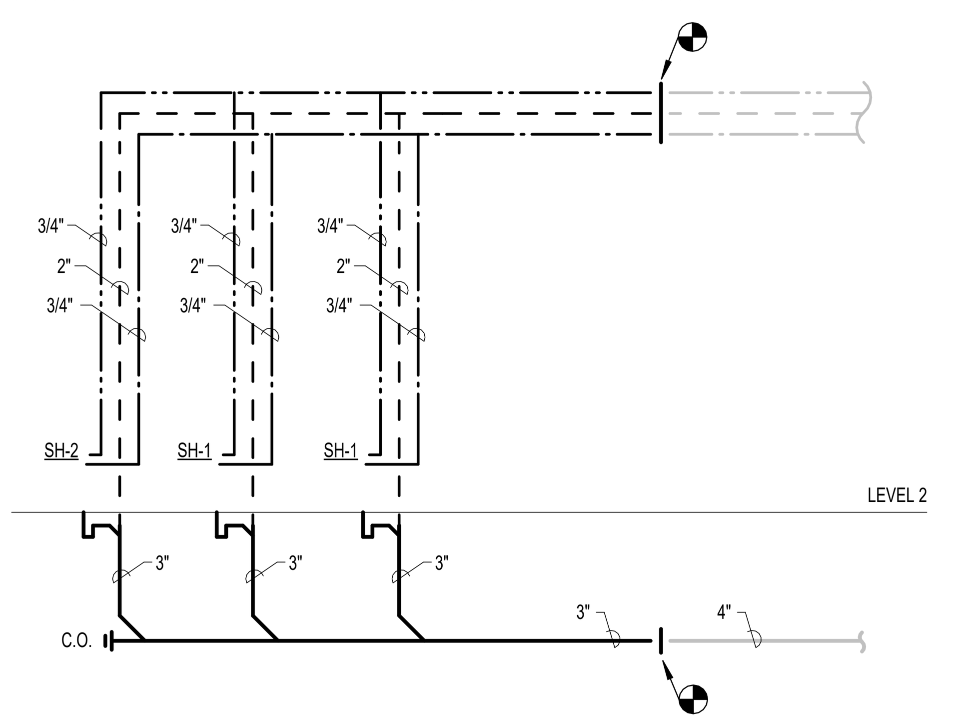

9 PLUMBING RISER DIAGRAM 2
N.T.S.

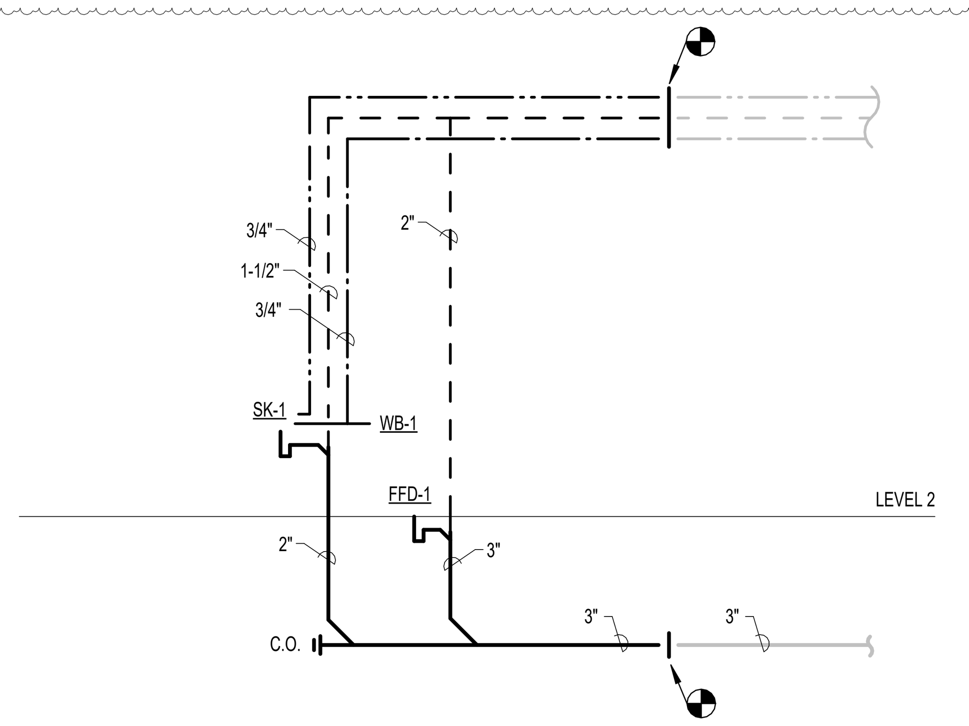

8 PLUMBING RISER DIAGRAM 1
N.T.S.

PLUMBING PIPE MATERIALS

SYSTEM:	MATERIAL:
WATER PIPE, ABOVE GRADE	TYPE 'L' COPPER
WATER PIPE, BELOW GRADE	TYPE 'K' COPPER
SANITARY SEWER & VENT, ABOVE GRADE	CAST IRON NO HUB
SANITARY SEWER & VENT, BELOW GRADE	SCHEDULE 40 PVC
FIRE SPRINKLER LINE	BLACK STEEL

PLUMBING FIXTURE AND CONNECTION SCHEDULE

MARK	FIXTURE	ROUGH-IN CONNECTION SIZE				MANUFACTURER	MODEL	DESCRIPTION AND NOTES
		C.W.	H.W.	VENT	WASTE			
3" FD-1	FLOOR DRAIN					ZURN	Z415	FLOOR DRAIN W/ TYPE 'B' STRAINER.
3" FFD-1	FUNNEL FLOOR DRAIN					ZURN	Z415	FLOOR DRAIN W/ TYPE 'E' STRAINER.
EWH-1	ELECTRIC WATER HEATER					A.O. SMITH	DEN-52	50 GALLON, 12 KW, 208 V, STORAGE TYPE ELECTRIC WATER HEATER, WITH ARMSTRONG COMPASS H CIRCULATING PUMP, 2.0 GPM, 5 FT. HEAD.
SH-1	SHOWER					SYMMONS	C-96-1-X	TEMPTROL SHOWER SYSTEM WITH SYMMONS TEMPTROL PRESSURE BALANCING MIXING VALVE. SHOWER DRAIN TO BE 3" ZURN #Z-415 FLOOR DRAIN WITH CHROME STRAINER.
SH-2	SHOWER (ADA)					SYMMONS	C-96-500-B30-V-X	ADA TEMPTROL HAND SHOWER SYSTEM WITH SYMMONS TEMPTROL PRESSURE BALANCING MIXING VALVE. SHOWER DRAIN TO BE 3" ZURN #Z-415 FLOOR DRAIN WITH CHROME STRAINER.
SK-1	SINK (SINGLE COMPARTMENT)	1/2"		1-1/2"	2"	ELKAY	CELEBRITY GECR-2521-L	SINGLE COMPARTMENT COUNTERTOP, STAINLESS STEEL SINK, ADA, REAR DRAIN, WITH CHICAGO 895-317GN2AE3ABCP GOOSENECK FAUCET, 2.2GPM, WRISTBLADES. PROVIDE WITH TRU-BRO TRAP AND STOP PROTECTORS OR HANDI BASIN GUARD UNDERSINK ENCLOSURE AS REQUIRED, COORDINATE WITH ARCHITECT.
WB-1	WALL BOX	1/2"	1/2"	-	-	GUY GRAY	MDWB1AB	WALL BOX FOR ICEMAKER. WALL BOX TO INCLUDE 1/2" INLET, 3/8" OUTLET QUARTER TURN VALVE WITH ARRESTER. PROVIDE 1/2" WATTS SERIES 7 DUAL CHECK VALVE.

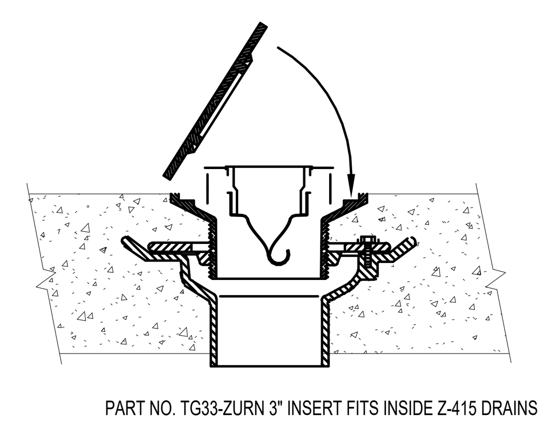

PART NO. TG33-ZURN 3" INSERT FITS INSIDE Z-415 DRAINS

IMPORTANT NOTES :

1. THIS TRAP GUARD INSERT CAN BE INSTALLED INTO ANY ZURN # 415 DRAIN TOPS TO PREVENT SEWER GAS EMISSION.
2. THE EXTRA WIDE FLANGE NEEDS TO HAVE AN ADHESIVE TYPE CAULK INSTALLED AROUND THE BOTTOM EDGE.
3. MOST Z415 TAILPIECES HAVE 4 PROTRUSIONS INSIDE THE 3-1/2" OPENING SO THE SEAL MUST BE MADE AROUND THE EDGE OF THE TG FLANGE. MAKE SURE INSIDE OF TAILPIECE IS CLEAN.

IF THE TRAP GUARD DEVICE SHOULD GET DAMAGED OR IMPAIRED IN ANY WAY, THE DEVICE CAN BE EASILY REMOVED BY USING A SHARP SCREW DRIVER UNDER THE FLANGE.

NOTE: CARE SHOULD BE TAKEN NOT TO TOUCH THE ELASTOMERIC FLEXIBLE MATERIAL WITH THE PRIMER.

NO FIRE RATINGS ARE
REQUIRED FOR UNDERGROUND
PIPING OR OPENINGS

6 TRAP GUARD INSERT DETAIL
NOT TO SCALE

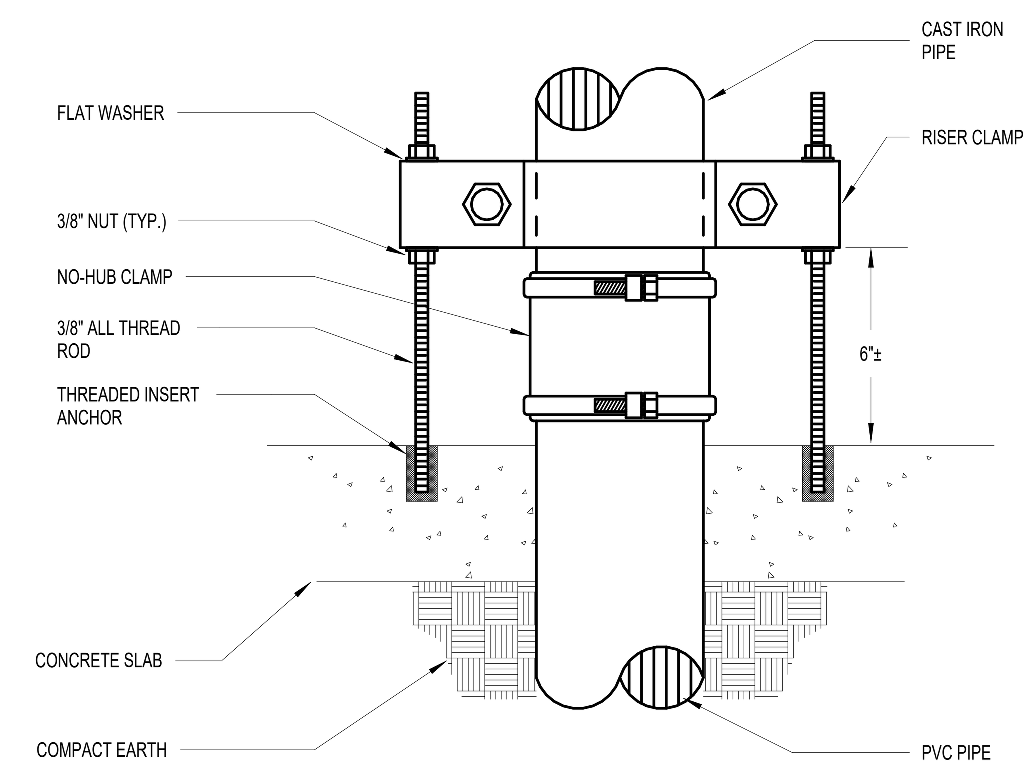

4 CAST IRON TO PVC TRANSITION DETAIL
NOT TO SCALE

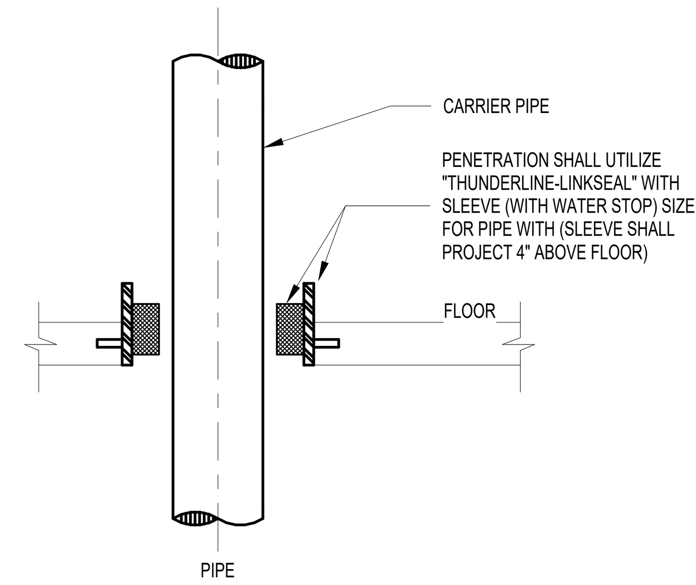

2 PIPE PENETRATION THRU FLOOR DETAIL
NOT TO SCALE

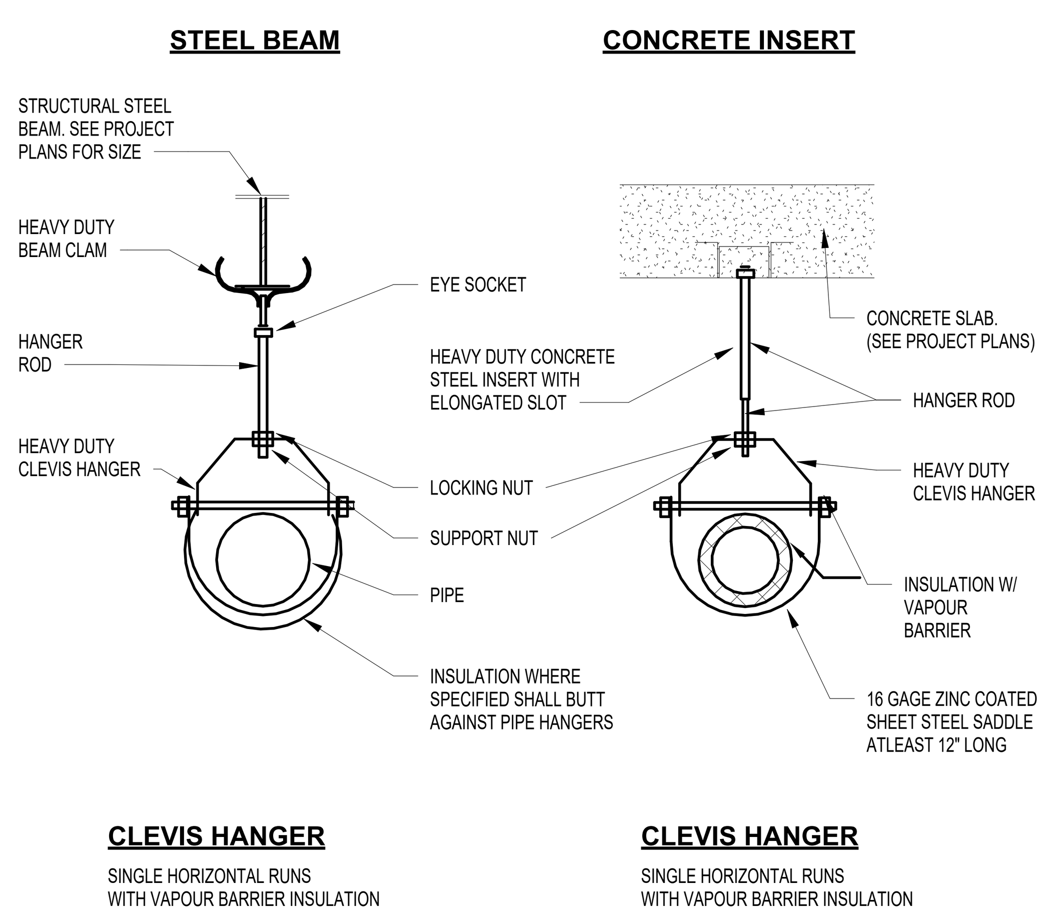

7 TYPICAL HANGER DETAIL
NOT TO SCALE

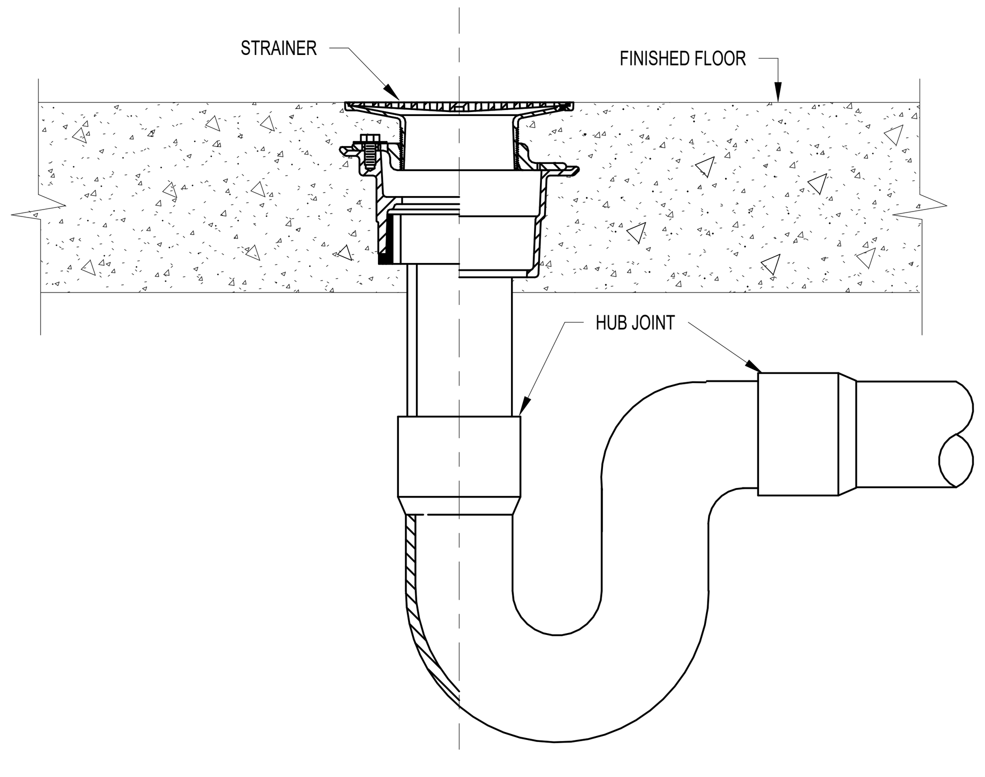

5 TYPICAL FLOOR DRAIN DETAIL
NOT TO SCALE

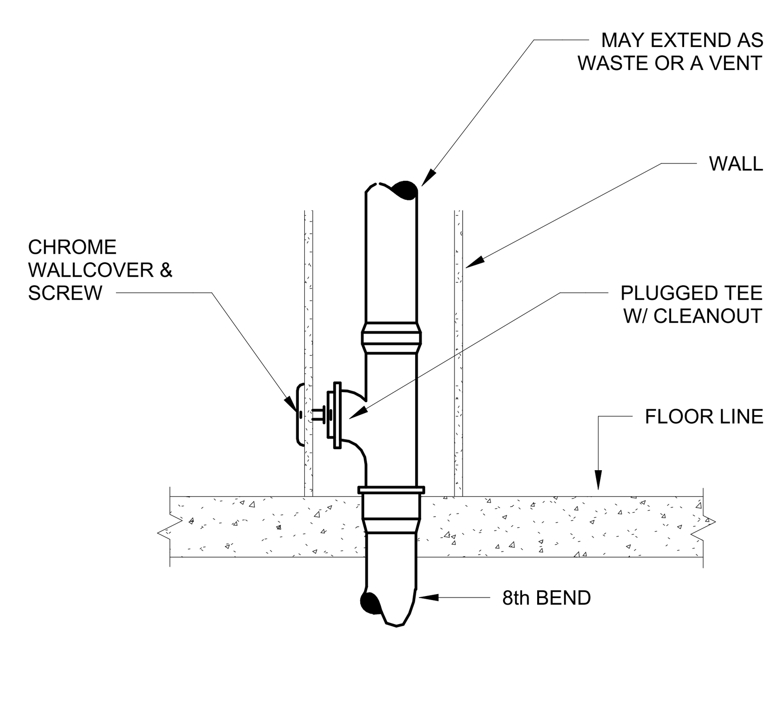

3 WALL CLEANOUT
NOT TO SCALE

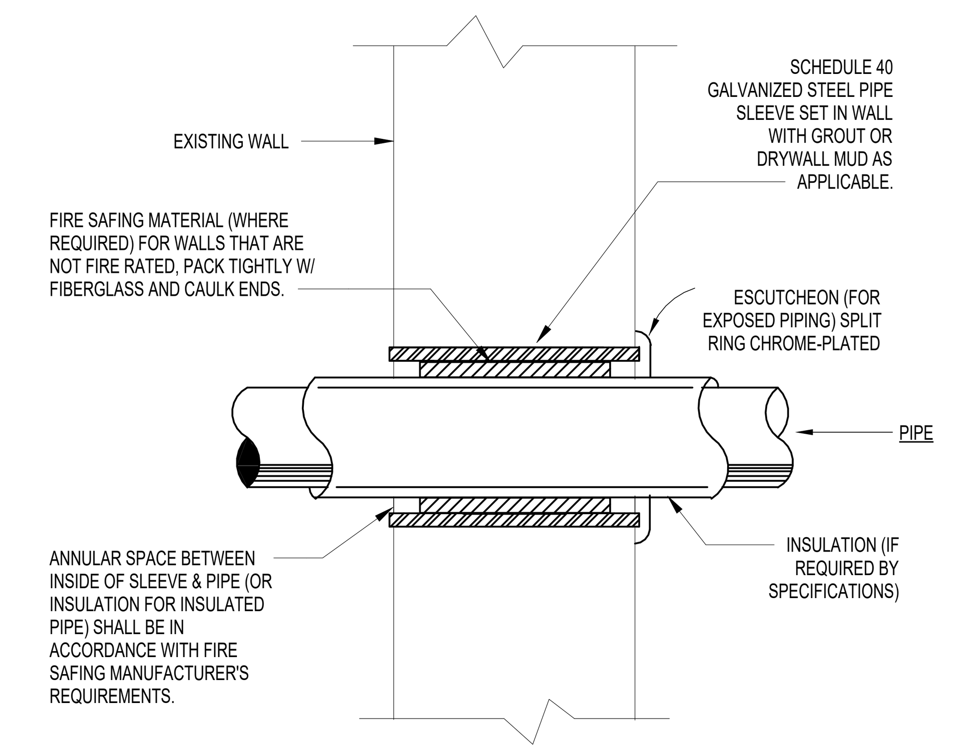

NOTE:
PROVIDE AND INSTALL A UL APPROVED FIRE SAFING ASSEMBLY IN ACCORDANCE W/ FIRE SAFING MANUFACTURER'S REQUIREMENTS FOR TYPE OF WALL, HOUR RATING OF WALL AND MATERIAL OF PIPING PASSING THRU WALL SLEEVE. FIRE SAFING ASSEMBLY TO BE "3M" OR APPROVED EQUAL.

1 INTERIOR WALL SLEEVE
NOT TO SCALE

N. CURTIS JONES, JR.
58428
REGISTERED PROFESSIONAL ENGINEER
JE#5120
03/13/2026
THE SEAL APPEARING ON THIS DOCUMENT WAS AUTHORIZED BY N. CURTIS JONES, JR. P.E. 58428

JONES ENGINEERS, L.P.
Consulting Mechanical/Electrical/Plumbing Engineers
9820 Whithorn Dr. Houston, Texas 77095 (713)222-7766
Texas Registered Engineering Firm #F-3811

SLI GROUP, INC.
ARCHITECTURE | DESIGN | CONSTRUCTION
15810 PARK TEN PLACE, SUITE 300
HOUSTON, TEXAS 77084
713-465-4650
www.sligroup.com

© COPYRIGHT

HARRIS COUNTY ESD 48
ADMINISTRATION BUILDING RENOVATION
21201 MORTON ROAD
KATY, TEXAS 77449

Project Number : 8969

	DATE
ISSUED FOR CLIENT APPROVAL	
ISSUED FOR BIDDING	
ISSUED FOR PERMIT	
ISSUED FOR CONSTRUCTION	

REVISIONS

MARK	DESCRIPTION	DATE
A	Addendum A	03/06/2026

The information, ideas, designs, details, layouts, techniques, features, arrangements, plans, sequences, dimensions, allowances, tolerances, conceptions, specifications, intentions, technology or embodiments, as illustrated, arranged, displayed, noted, recorded, indicated, represented, disclosed, evidenced, detailed or otherwise reduced to tangible form hereon, either expressly, inherently or by implication, are the confidential and proprietary information of SLI Design, Inc., and shall not be used for any purpose other than the specific project or undertaking identified on the drawing title block or legend for which they are and have been prepared by SLI Design, Inc. Any other reproduction, disclosure or use of any portion of the confidential and proprietary information of SLI Design, Inc., shall be a breach of the obligation of confidence created by the acceptance of this drawing from SLI Design, Inc. for a specific project or Contract. Any copying, duplicating, reproducing, utilization, alteration, modification, revision or change to this drawing, is expressly prohibited unless done with the prior written consent or approval of SLI Design, Inc., and shall not be undertaken without receipt of such prior written approval. This drawing is loaned by SLI Design, Inc., for the limited purpose of complying with a specific Contract. The drawing remains the property of SLI Design, Inc., and shall be returned upon request or completion of the contract, unless specifically authorized by Contract, under which it was loaned.

PRINT DATE: 3/13/2026 11:52:29 AM

DRAWING TITLE
PLUMBING SCHEDULES & DETAILS

DRAWN BY	JE	SHEET NO.
CHECKED BY	JE	P3.02
APPROVED BY	JE	

C:\Users\tim.luber\AppData\Local\Autodesk\Revit\Autodesk Revit 2026\CollaborationCache\96XDKA6XA6FN\e3e72d56-50b7-43d5-9df9-773d5d174cd3\f644f34a-1abf-404e-b933-982212ff9fba.rvt