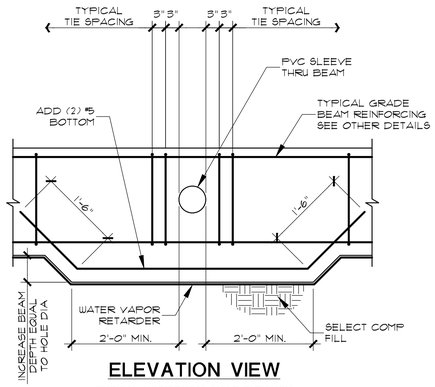

ELEVATION VIEW

TYPICAL HORIZONTAL HOLE THROUGH GRADE BEAM LARGER THAN 4" DIA.

12 GRADE BEAM PENETRATION DETAIL

SCALE: 3/4" = 1'-0"

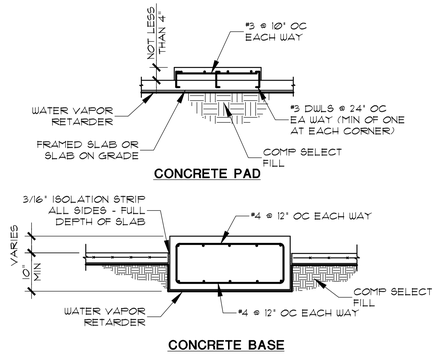

NOTE: VERIFY ALL PAD AND BASE LOCATIONS, DIMENSIONS, AND ADEQUACY WITH THE MECHANICAL ENGINEER AND THE INDIVIDUAL EQUIPMENT REQUIREMENTS. MECHANICAL ENGINEER TO SPECIFY ISOLATION DATA. PROVIDE ADDITIONAL LAYER OF REINFORCING FOR PAD THICKNESS GREATER THAN 18".

9 PAD AND BASE DETAIL

SCALE: NTS

6 DETAIL

SCALE: 3/4" = 1'-0"

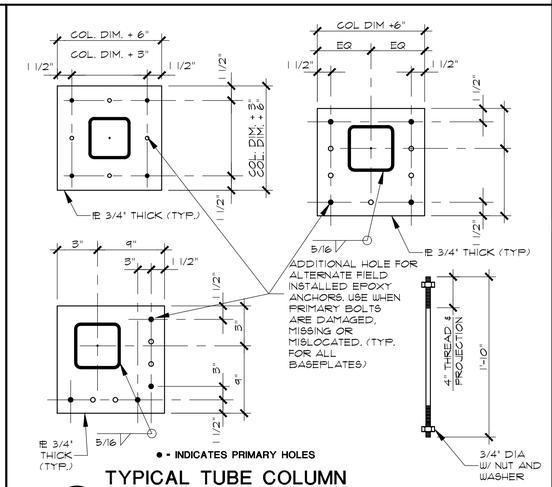

● - INDICATES PRIMARY HOLES

3 TYPICAL TUBE COLUMN BASE PLATE DETAILS

SCALE: NTS

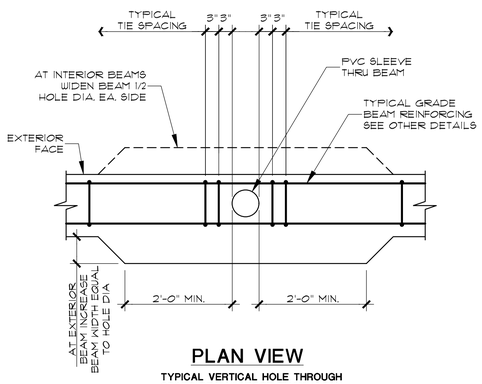

PLAN VIEW

TYPICAL VERTICAL HOLE THROUGH GRADE BEAM LARGER THAN 4" DIA.

11 GRADE BEAM PENETRATION DETAIL

SCALE: 3/4" = 1'-0"

8 DETAIL

SCALE: 3/4" = 1'-0"

5 DETAIL

SCALE: 3/4" = 1'-0"

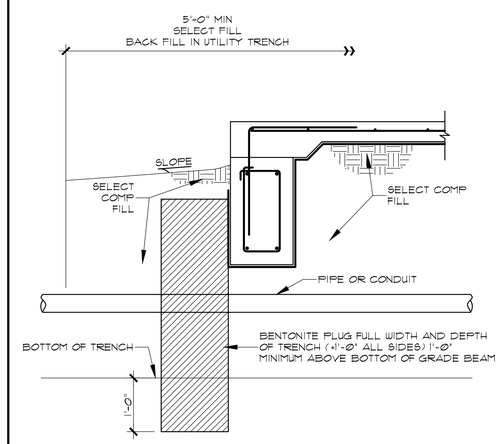

2 PIPE ENTRY DETAIL

SCALE: 3/4" = 1'-0"

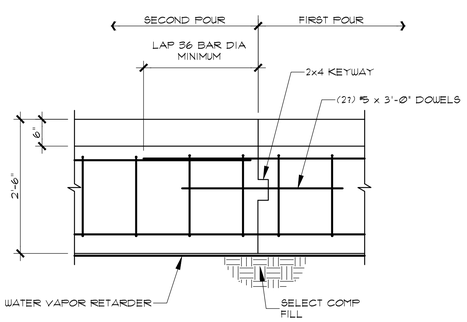

ELEVATION VIEW

LOCATE JOINTS IN MIDDLE THIRD OF BEAM SPAN BETWEEN SUPPORTS

10 GRADE BEAM CONSTRUCTION JOINT

SCALE: 3/4" = 1'-0"

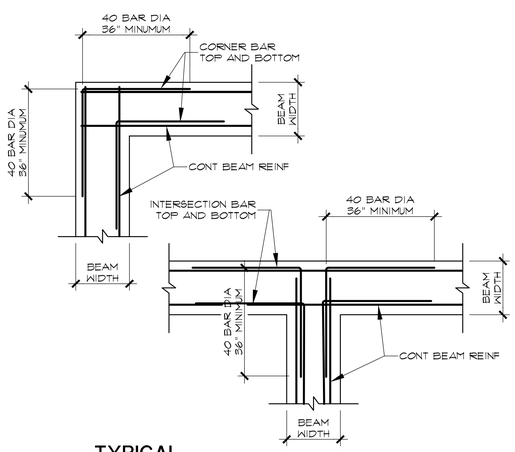

7 TYPICAL CORNER BAR DETAIL

SCALE: 3/4" = 1'-0"

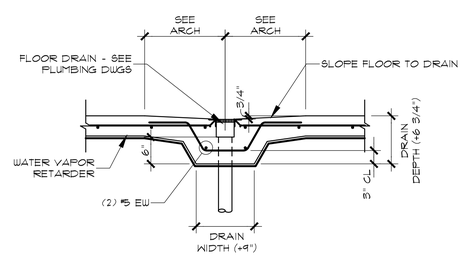

VERIFY LOCATION WITH PLUMBING DRAWINGS

4 FLOOR DRAIN DETAIL

SCALE: 3/4" = 1'-0"

CONTRACTION JOINT MAY BE SAWCUT TO 1/4 OF THE SLAB DEPTH NO MORE THAN 6 HOURS AFTER SLAB PLACEMENT

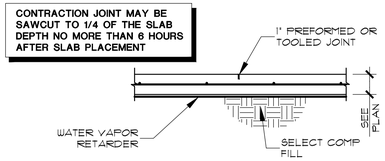

SLAB CONTRACTION JOINT

SEE PLAN FOR LOCATION OR SPACE AT 15' x 15' MAXIMUM IN EACH DIRECTION

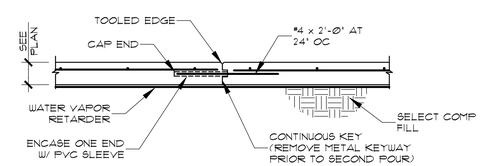

SLAB CONSTRUCTION JOINT

NOTE: AT CONTRACTOR'S OPTION, CONSTRUCTION JOINT MAY BE USED IN LIEU OF CONTRACTION JOINT.

1 SLAB JOINT DETAIL

SCALE: 3/4" = 1'-0"

SLI DESIGN, INC.

ARCHITECTURE PLANNING INTERIOR DESIGN

15810 PARK TEN PLACE, SUITE 300
HOUSTON, TEXAS 77084
713-465-4650
www.sligroup.com

© COPYRIGHT

Shell Federal CREDIT UNION

26000 block of FM 1093

Richmond, TX 77406

Project Number : 8972

	DATE
ISSUED FOR CLIENT APPROVAL	
ISSUED FOR BIDDING	04/01/2026
ISSUED FOR PERMIT	04/01/2026
ISSUED FOR CONSTRUCTION	

REVISIONS

MARK	DESCRIPTION	DATE

CJG Engineers
Texas Engineering
Firm Reg. No. F-170
6051 North Course Dr•Ste 375
Houston, Texas 77072
713.780.3345

The information, ideas, designs, details, layouts, techniques, features, arrangements, plans, sequences, dimensions, allowances, tolerances, conceptions, specifications, intentions, technology or embodiments, as illustrated, arranged, displayed, noted, recorded, indicated, represented, disclosed, evidenced, detailed or otherwise reduced to tangible form hereon, either expressly, inherently or by implication, are the confidential and proprietary information of SLI Design, Inc., and shall not be used for any purpose other than the specific project or undertaking identified on the drawing title block or legend for which they are and have been prepared by SLI Design, Inc. Any other reproduction, disclosure or use of any portion of the confidential and proprietary information of SLI Design, Inc., shall be a breach of the obligation of confidence created by the acceptance of this drawing from SLI Design, Inc. for a specific project or Contract. Any copying, duplicating, reproducing, utilization, alteration, modification, revision or change to this drawing, is expressly prohibited unless done with the prior written consent or approval of SLI Design, Inc., and shall not be undertaken without receipt of such prior written approval. This drawing is loaned by SLI Design, Inc., for the limited purpose of complying with a specific Contract. The drawing remains the property of SLI Design, Inc., and shall be returned upon request or completion of the contract, unless specifically authorized by Contract, under which it was loaned.

PRINT DATE:

STATE OF TEXAS
BRITT GARDNER
90958
LICENSED PROFESSIONAL ENGINEER

04/01/2026

DRAWING TITLE

FOUNDATION DETAILS

DRAWN BY	AD	SHEET NO.
CHECKED BY	BG	S3.02
APPROVED BY	BG	