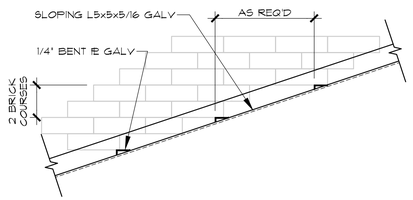

12 ANGLE ON SLOPE
SCALE:3/4"=1'-0"

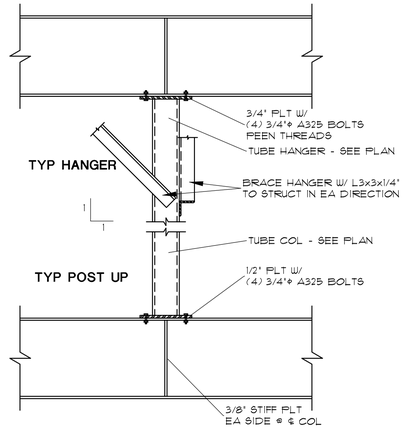

9 POST UP DETAIL
SCALE:3/4" = 1'-0"

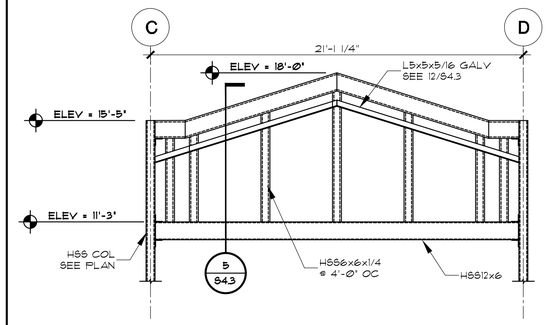

6 ELEVATION
SCALE:1/4"=1'-0"

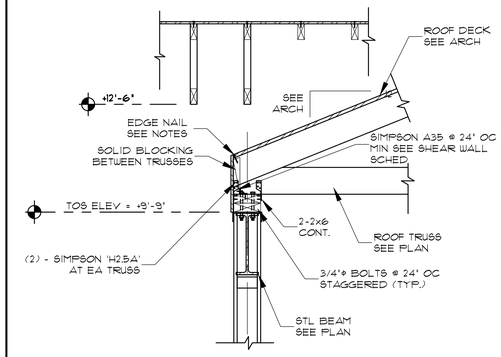

3 DETAIL
SCALE:3/4"=1'-0"

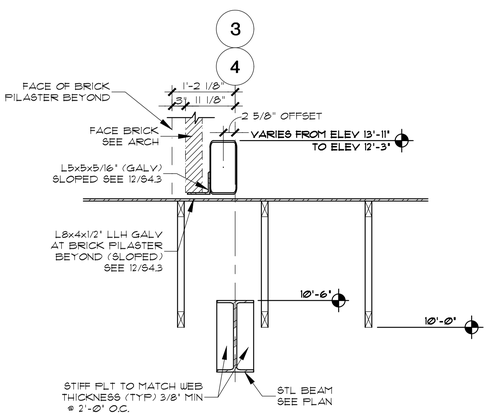

11 DETAIL
SCALE:N.T.S.

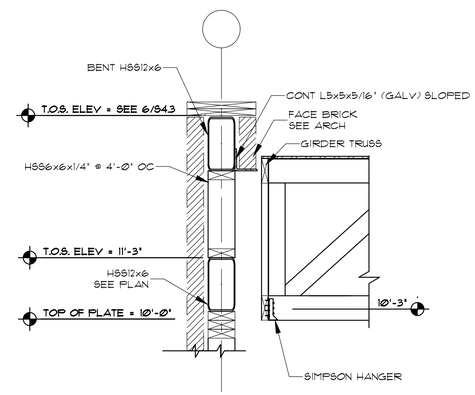

5 DETAIL
SCALE:3/4"=1'-0"

NAILING SCHEDULE

CONNECTIONS	NAILING
1. JOIST TO SILL OR GIRDER, TOENAIL	3–8d
2. BRIDGING TO JOIST, TOENAIL EA. END	2–8d
3. 1"x6" SUBFLOOR OR LESS TO EA. JOIST, FACE NAIL	2–8d
4. WIDER THAN 1"x6" SUBFLOOR TO EA. JOIST FACE NAIL	3–8d
5. 2" SUBFLOOR TO JOIST OR GIRDER, BLIND AND FACE NAIL	2–16d
6. SOLE PLATE TO JOIST OR BLOCKING, FACE NAIL SOLE PLATE TO JOIST OR BLOCKING, AT BRACED WALL PANELS	16d @ 16"OC 3–16d PER 16"
7. TOP PLATE TO STUD, END NAIL	2–16d
8. STUD TO SOLE PLATE	4–8d, TOENAIL OR 2–16d, END NAIL
9. DOUBLE STUDS, FACE NAIL	16d @ 24"OC
10. DOUBLE TOP PLATES, FACE NAIL DOUBLE TOP PLATES, LAP SPLICE	16d @ 16"OC 8–16d
11. BLOCKING BETWEEN JOISTS OR RAFTERS TO TOP PLATE, TOENAIL	3–8d
12. RIM JOIST TO TOP PLATE, TOENAIL	8d @ 6"OC
13. TOP PLATES, LAPS AND INTERSECTIONS, FACE NAIL	2–16d
14. CONTINUOUS HEADER, TWO PIECES	16d @ 16"OC ALONG EA. EDGE
15. CEILING JOIST TO PLATE, TOENAIL	3–8d
16. CONTINUOUS HEADER TO STUD, TOENAIL	4–8d
17. CEILING JOIST, LAPS OVER PARTITIONS, FACE NAIL	3–16d
18. CEILING JOIST TO PARALLEL RAFTERS, FACE NAIL	3–16d
19. RAFTER TO PLATE, TOENAIL	3–8d
20. 1" BRACE TO EA. STUD AND PLATE, FACE NAIL	2–8d
21. 1"x8" SHEATHING OR LESS TO EA. BEARING, FACE NAIL	2–8d
22. WIDER THAN 1"x8" SHEATHING TO EA. BEARING, FACE NAIL	3–8d
23. BUILT–UP CORNER STUDS	16d @ 24"OC
24. BUILT–UP GIRDER AND BEAMS	20d @ 32"OC AT TOP AND BOTTOM AND STAGGERED 2–20d @ EA. ENDS AND AT EA SPLICE
25. TRUSS TO PLATE, TOENAIL	3–16d

1 NAILING SCHEDULE
SCALE:N.T.S.

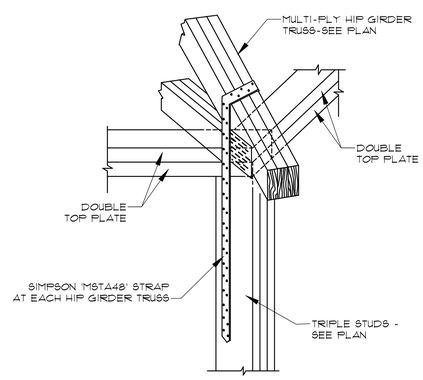

10 GIRDER TRUSS HOLDOWN DETAIL AT WALL CORNERS
SCALE:N.T.S.

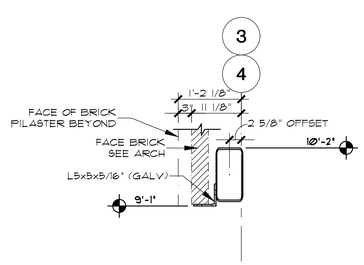

7 DETAIL
SCALE:1/4"=1'-0"

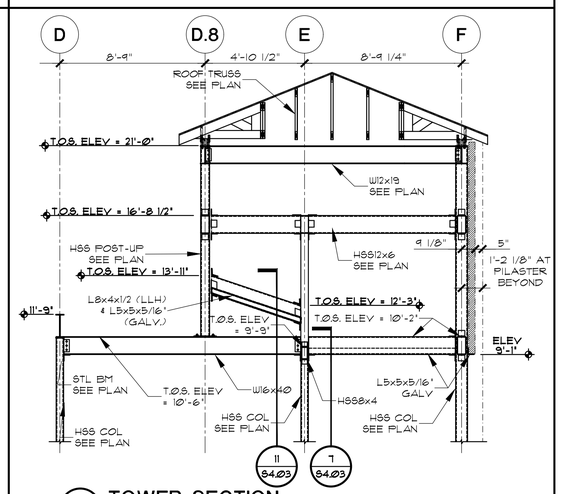

4 TOWER SECTION
SCALE:1/4"=1'-0"

SLI DESIGN, INC.
ARCHITECTURE PLANNING INTERIOR DESIGN
15810 PARK TEN PLACE, SUITE 300
HOUSTON, TEXAS 77084
713-465-4650
www.sligroup.com

© COPYRIGHT

Shell Federal CREDIT UNION

26000 block of FM 1093
Richmond, TX 77406

Project Number : 8972

ISSUED FOR CLIENT APPROVAL	DATE
ISSUED FOR BIDDING	04/01/2026
ISSUED FOR PERMIT	04/01/2026
ISSUED FOR CONSTRUCTION	

REVISIONS

MARK	DESCRIPTION	DATE

CJG Engineers
Texas Engineering
Firm Reg. No. F-170
6051 North Course Dr•Ste 375
Houston, Texas 77072
713.780.3345

The information, ideas, designs, details, layouts, techniques, features, arrangements, plans, sequences, dimensions, allowances, tolerances, conceptions, specifications, intentions, technology or embodiments, as illustrated, arranged, displayed, noted, recorded, indicated, represented, disclosed, evidenced, detailed or otherwise reduced to tangible form hereon, either expressly, inherently or by implication, are the confidential and proprietary information of SLI Design, Inc., and shall not be used for any purpose other than the specific project or undertaking identified on the drawing title block or legend for which they are and have been prepared by SLI Design, Inc. Any other reproduction, disclosure or use of any portion of the confidential and proprietary information of SLI Design, Inc., shall be a breach of the obligation of confidence created by the acceptance of this drawing from SLI Design, Inc. for a specific project or Contract. Any copying, duplicating, reproducing, utilization, alteration, modification, revision or change to this drawing, is expressly prohibited unless done with the prior written consent or approval of SLI Design, Inc., and shall not be undertaken without receipt of such prior written approval. This drawing is loaned by SLI Design, Inc., for the limited purpose of complying with a specific Contract. The drawing remains the property of SLI Design, Inc., and shall be returned upon request or completion of the contract, unless specifically authorized by Contract, under which it was loaned.

PRINT DATE:

STATE OF TEXAS
BRITT GARDNER
90958
LICENSED PROFESSIONAL ENGINEER
04/01/2026

DRAWING TITLE
FRAMING DETAILS

DRAWN BY	AD	SHEET NO.
CHECKED BY	BG	S4.03
APPROVED BY	BG	