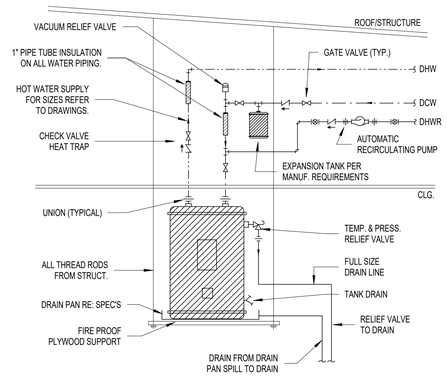

7 WATER HEATER DETAIL

NOT TO SCALE

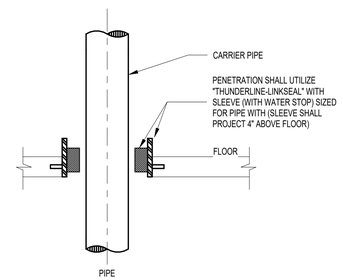

6 PIPE PENETRATION THRU FLOOR DETAIL

NOT TO SCALE

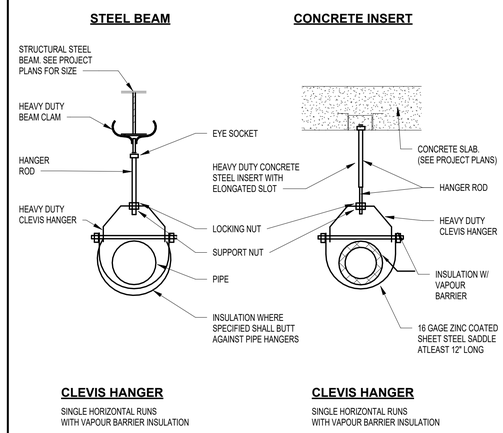

5 TYPICAL HANGER DETAIL

NOT TO SCALE

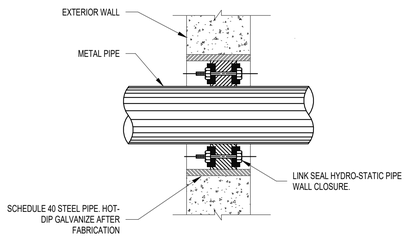

4 EXTERIOR WALL SLEEVE DETAIL

NOT TO SCALE

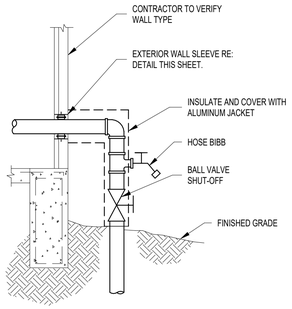

3 WATER ENTRY DETAIL

NOT TO SCALE

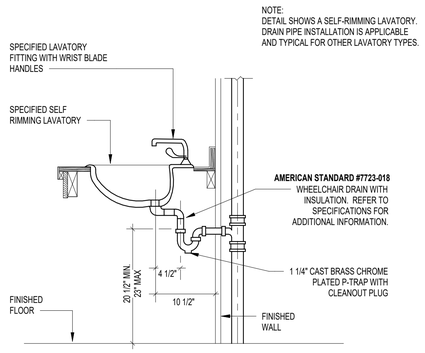

2 TYPICAL HANDICAPPED LAVATORY DETAIL

NOT TO SCALE

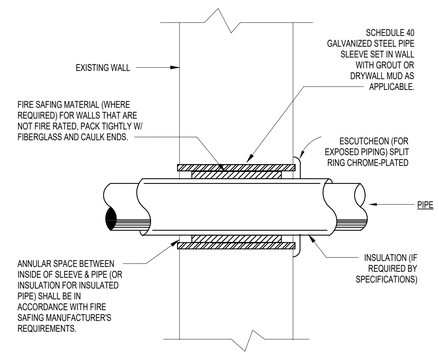

NOTE:
PROVIDE AND INSTALL A UL APPROVED FIRE SAFING ASSEMBLY IN ACCORDANCE W/ FIRE SAFING MANUFACTURER'S REQUIREMENTS FOR TYPE OF WALL, HOUR RATING OF WALL AND MATERIAL OF PIPING PASSING THRU WALL SLEEVE. FIRE SAFING ASSEMBLY TO BE "3M" OR APPROVED EQUAL.

1 INTERIOR WALL SLEEVE

NOT TO SCALE

SLI DESIGN, INC.

ARCHITECTURE PLANNING INTERIOR DESIGN

15810 PARK TEN PLACE, SUITE 300
HOUSTON, TEXAS 77084
713-465-4650
www.sligroup.com

© COPYRIGHT

Shell Federal CREDIT UNION

26620 FM 1093 RD

KATY, TEXAS 77494

Project Number : 8925

	DATE
ISSUED FOR CLIENT APPROVAL	
ISSUED FOR BIDDING	
ISSUED FOR PERMIT	
ISSUED FOR CONSTRUCTION	

REVISIONS

MARK	DESCRIPTION	DATE
	ISSUE FOR BID	04/07/2026

The information, ideas, designs, details, layouts, techniques, features, arrangements, plans, sequences, dimensions, allowances, tolerances, conceptions, specifications, intentions, technology or embodiments, as illustrated, arranged, displayed, noted, recorded, indicated, represented, disclosed, evidenced, detailed or otherwise reduced to tangible form hereon, either expressly, inherently or by implication, are the confidential and proprietary information of SLI Design, Inc., and shall not be used for any purpose other than the specific project or undertaking identified on the drawing title block or legend for which they are and have been prepared by SLI Design, Inc. Any other reproduction, disclosure or use of any portion of the confidential and proprietary information of SLI Design, Inc., shall be a breach of the obligation of confidence created by the acceptance of this drawing from SLI Design, Inc. for a specific project or Contract. Any copying, duplicating, reproducing, utilization, alteration, modification, revision or change to this drawing, is expressly prohibited unless done with the prior written consent or approval of SLI Design, Inc., and shall not be undertaken without receipt of such prior written approval. This drawing is loaned by SLI Design, Inc., for the limited purpose of complying with a specific Contract. The drawing remains the property of SLI Design, Inc., and shall be returned upon request or completion of the contract, unless specifically authorized by Contract, under which it was loaned.

PRINT DATE: 4/6/2026 3:54:07 PM

N. CURTIS JONES, JR. 58428 REGISTERED PROFESSIONAL ENGINEER

JE#5126
04/07/2026

THE SEAL APPEARING ON THIS DOCUMENT WAS AUTHORIZED BY N. CURTIS JONES, JR. P.E. 58428

JONES ENGINEERS, L.P.
Consulting Mechanical/Electrical/Plumbing Engineers
9820 Whithorn Dr. Houston, Texas 77095 (713)222-7766
Texas Registered Engineering Firm #F-3811

DRAWING TITLE
PLUMBING DETAILS

DRAWN BY	JE	SHEET NO.
CHECKED BY	JE	P3.03
APPROVED BY	JE	

Autodesk Docs://5126 - SFCU Fulshear/5126_MEP_SFCU_Fulshear_R26.rvt