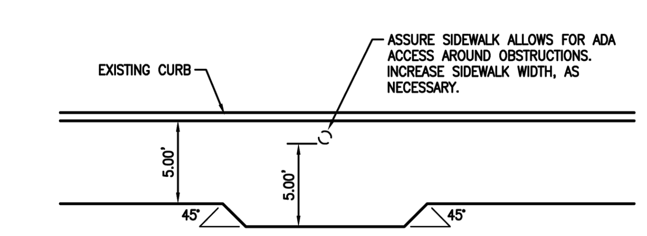

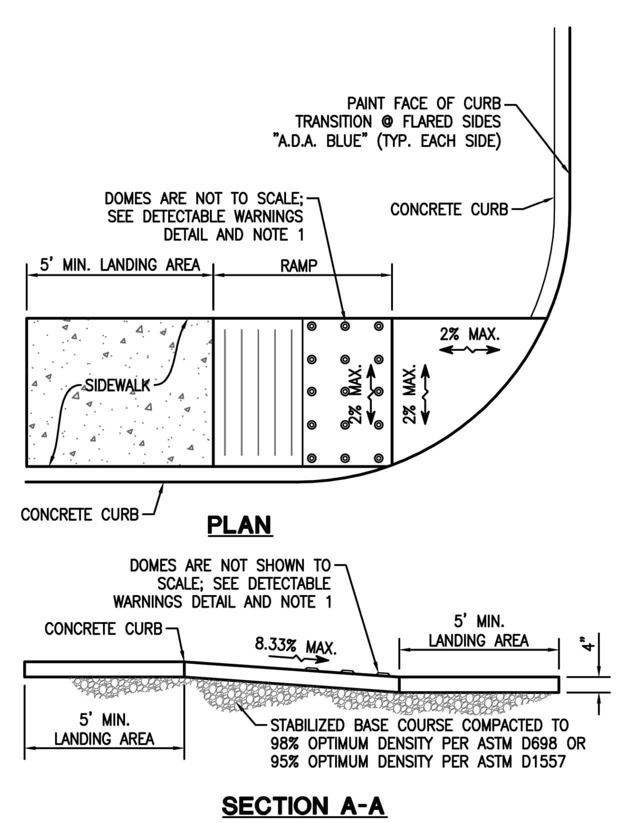

NOTES:

1. THE SURFACE OF RAMP SHALL HAVE DETECTABLE WARNINGS AS SHOWN. DETECTABLE WARNINGS WITHIN PUBLIC R.O.W. SHALL CONSIST OF RAISED TRUNCATED DOMES. SEE DETECTABLE WARNING DETAIL.
2. RAMP SIDE SLOPE VARIES UNIFORMLY FROM A MAXIMUM OF UP TO 10% AT CURB TO CONFORM WITH LONGITUDINAL SIDEWALK SLOPE ADJACENT TO TOP OF THE RAMP.
3. CONSTRUCT PER A.D.A. STANDARDS.
4. REFER TO PLANS FOR ADJACENT SLOPES.
5. THE CROSS SLOPE OF THE RAMP SURFACE SHALL BE NO GREATER THAN 1:50.
6. AT A MINIMUM THE BOTTOM 2' OF THE CURB RAMP SHALL CONTRAST VISUALLY WITH ADJOINING SURFACES AND CONTAIN DETECTABLE WARNING SURFACE.
7. CONTRACTOR SHALL VERIFY REQUIREMENTS OF LOCAL CODES PRIOR TO CONSTRUCTING RAMPS.

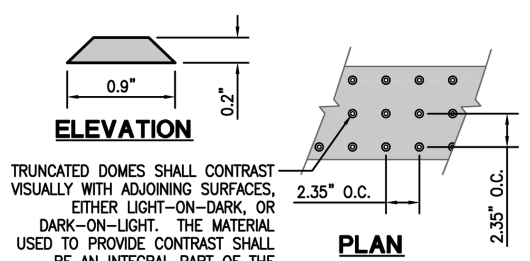

TRUNCATED DOMES SHALL CONTRAST VISUALLY WITH ADJOINING SURFACES, EITHER LIGHT-ON-DARK, OR DARK-ON-LIGHT. THE MATERIAL USED TO PROVIDE CONTRAST SHALL BE AN INTEGRAL PART OF THE WALKING SURFACE.

DETECTABLE WARNINGS DETAIL

* PRE-FABRICATED PANELS PER A.D.A. ACCESSIBILITY GUIDELINES SECTION 4.29.2 & A4.29.2 SHALL BE USED.

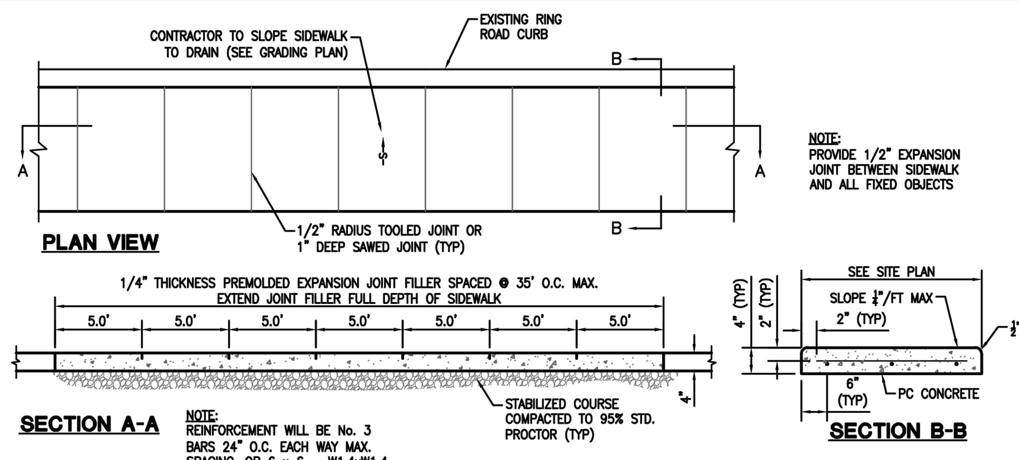

NOTE:
PROVIDE 1/2" EXPANSION JOINT BETWEEN SIDEWALK AND ALL FIXED OBJECTS

NOTE:
REINFORCEMENT WILL BE No. 3 BARS 24" O.C. EACH WAY MAX. SPACING, OR 6 x 6 – W1.4xW1.4 WWF

THE CROSSING AT KATY FULSHEAR STANDARD SIDEWALK AND RAMPING DETAILS

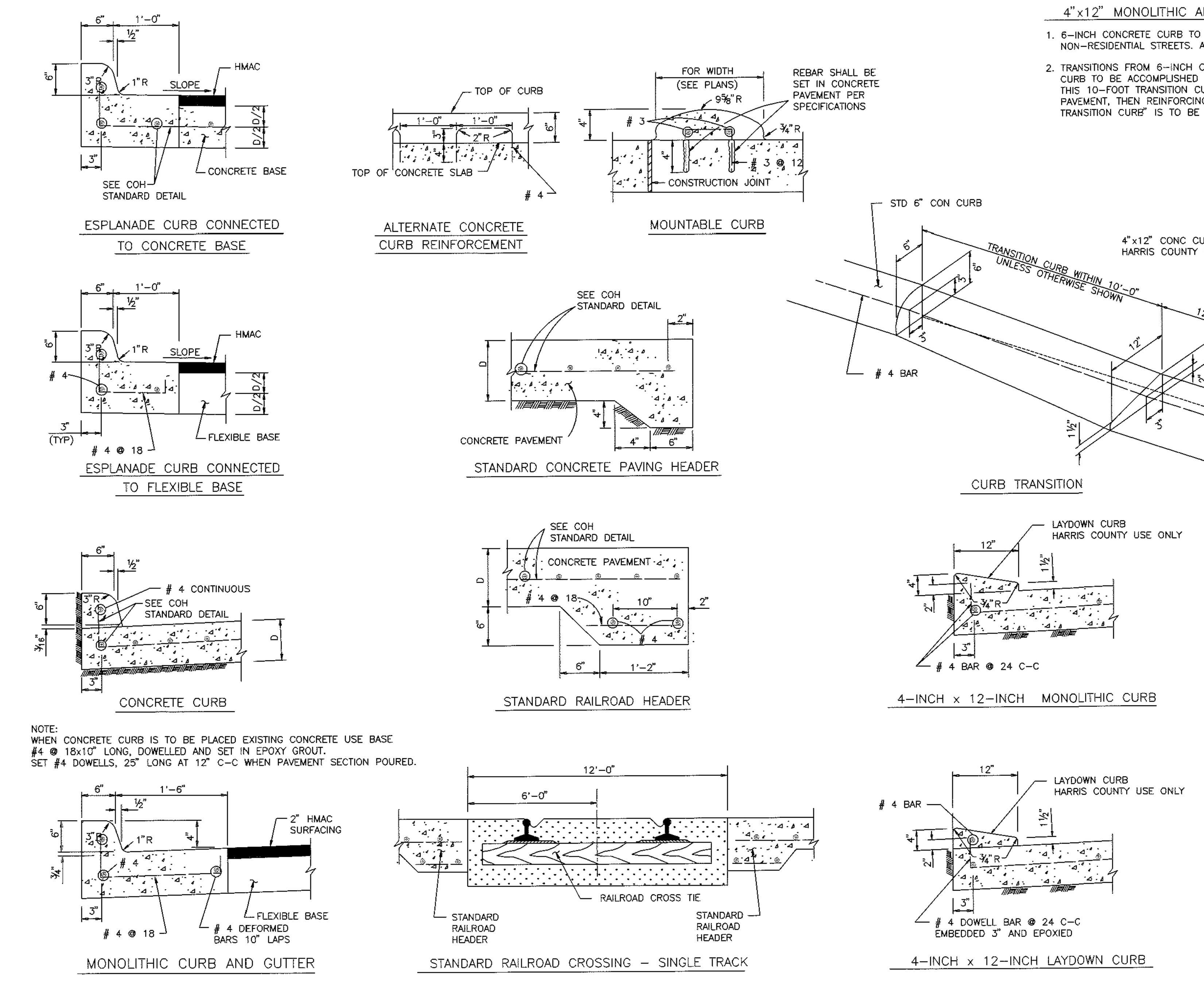

4"x12" MONOLITHIC AND TRANSITION CURB NOTES:

1. 6-INCH CONCRETE CURB TO BE CONSTRUCTED ON ALL ESPLANADES, ISLANDS NON-RESIDENTIAL STREETS. AND RESIDENTIAL STREETS
2. TRANSITIONS FROM 6-INCH CONCRETE CURB TO 4-INCH x 12-INCH CONCRETE CURB TO BE ACCOMPLISHED WITHIN 10 FEET, UNLESS OTHERWISE SHOWN. IF THIS 10-FOOT TRANSITION CURB IS NOT POURED MONOLITHICLY WITH THE PAVEMENT, THEN REINFORCING STEEL AS SHOWN IN "4-INCH x 12-INCH TRANSITION CURB" IS TO BE INSTALLED.

NOTE:
WHEN CONCRETE CURB IS TO BE PLACED EXISTING CONCRETE USE BASE #4 @ 18x10" LONG, DOWELLED AND SET IN EPOXY GROUT.
SET #4 DOWELLS, 25" LONG AT 12" C-C WHEN PAVEMENT SECTION POURED.

CITY OF HOUSTON
DEPARTMENT OF PUBLIC WORKS AND ENGINEERING
ENGINEERING, CONSTRUCTION AND REAL ESTATE DIVISION
CURB, CURB AND GUTTER AND HEADER DETAILS
(NOT TO SCALE)
APPROVED BY: CITY ENGINEER | APPROVED BY: DIRECTOR OF PUBLIC WORKS AND ENGINEERING
EFF DATE: OCT-01-2002 | DWG NO: 02771-01

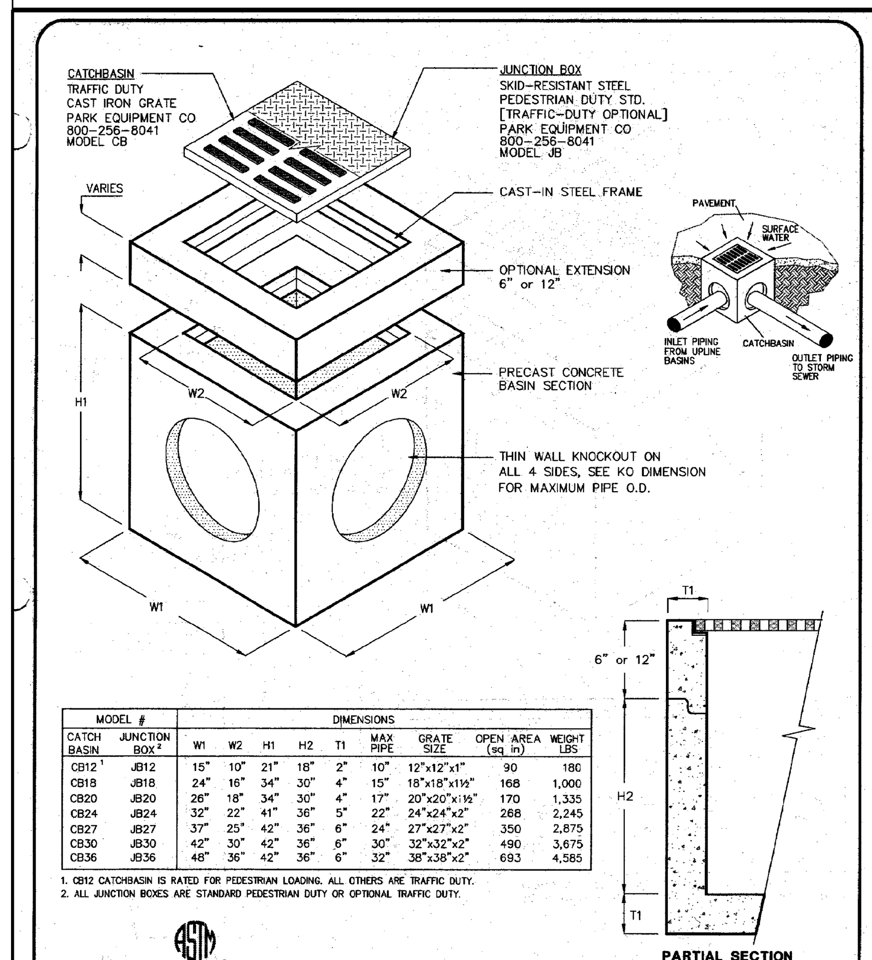

MODEL #		DIMENSIONS								
CATCH BASIN	JUNCTION BOX[2]	W1	W2	H1	H2	T1	MAX PIPE	GRATE SIZE	OPEN AREA (sq in)	WEIGHT LBS
CB12[1]	JB12	15"	10"	21"	18"	2"	10"	12"x12"x1"	90	180
CB18	JB18	24"	16"	34"	30"	4"	15"	18"x18"x1½"	168	1,000
CB20	JB20	26"	18"	34"	30"	4"	17"	20"x20"x1½"	170	1,335
CB24	JB24	32"	22"	41"	36"	5"	22"	24"x24"x2"	268	2,245
CB27	JB27	37"	25"	42"	36"	6"	24"	27"x27"x2"	350	2,875
CB30	JB30	42"	30"	42"	36"	6"	30"	32"x32"x2"	490	3,675
CB36	JB36	48"	36"	42"	36"	6"	32"	38"x38"x2"	693	4,585

1. CB12 CATCHBASIN IS RATED FOR PEDESTRIAN LOADING. ALL OTHERS ARE TRAFFIC DUTY.
2. ALL JUNCTION BOXES ARE STANDARD PEDESTRIAN DUTY OR OPTIONAL TRAFFIC DUTY.

ASTM C-913

©Park 2002

SPECIFICATIONS

CONCRETE: Class 1 concrete with of design strength of 4500 PSI at 28 days. Unit is of monolithic construction at floor and first stage of wall with sectional riser to required depth.

REINFORCEMENT: Grade 60 reinforced. Steel rebar conforming to ASTM A615 on required centers or equal.

C.I. CASTINGS: Cast iron frames and grates are manufactured of grey cast iron conforming to ASTM A48-76 Class 30.

PARK ENVIRONMENTAL EQUIPMENT 800-256-8041 www.park-USA.com
"Expect the Best"
CATCHBASIN MODEL CB - 12" THRU 36"
JUNCTION BOX MODEL JB - 12" THRU 36"

SCALE	DWG. NO.	REV.
NONE	CBJB36	A
DATE 01/02		

NOTES:

1. THIS DETAIL MAY BE USED ONLY FOR DRY STABLE TRENCH CONDITIONS PER COH STANDARD. SEE COH STANDARD SPECIFICATION FOR REQUIREMENTS IN OTHER CONDITIONS.
2. MIN TRENCH WIDTH SHALL BE PIPE OD PLUS AN ALLOWANCE "A" FOR THE NOMINAL PIPE SIZE:

NOMINAL PIPE SIZE	"A"
18" TO 30"	24"
OVER 30"	36"

3. MAX TRENCH WIDTH SHALL BE NOT GREATER THAN MIN TRENCH WIDTH PLUS 24 INCHES, UNLESS OTHERWISE NOTED.
4. ALTERNATIVE EMBEDMENT BACKFILL MATERIALS FOR FORCE MAINS MAY BE ALLOWED. SEE COH STANDARD SPECIFICATIONS.

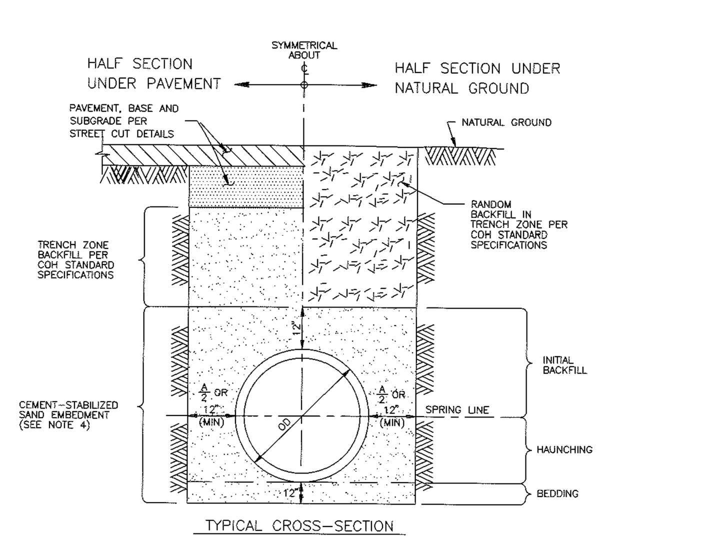

CITY OF HOUSTON
DEPARTMENT OF PUBLIC WORKS AND ENGINEERING
ENGINEERING, CONSTRUCTION AND REAL ESTATE DIVISION
SANITARY OR STORM SEWER BEDDING AND BACKFILL FOR DRY STABLE TRENCH
(NOT TO SCALE)
APPROVED BY: CITY ENGINEER | APPROVED BY: DIRECTOR OF PUBLIC WORKS AND ENGINEERING
EFF DATE: OCT-01-2002 | DWG NO: 02317-03

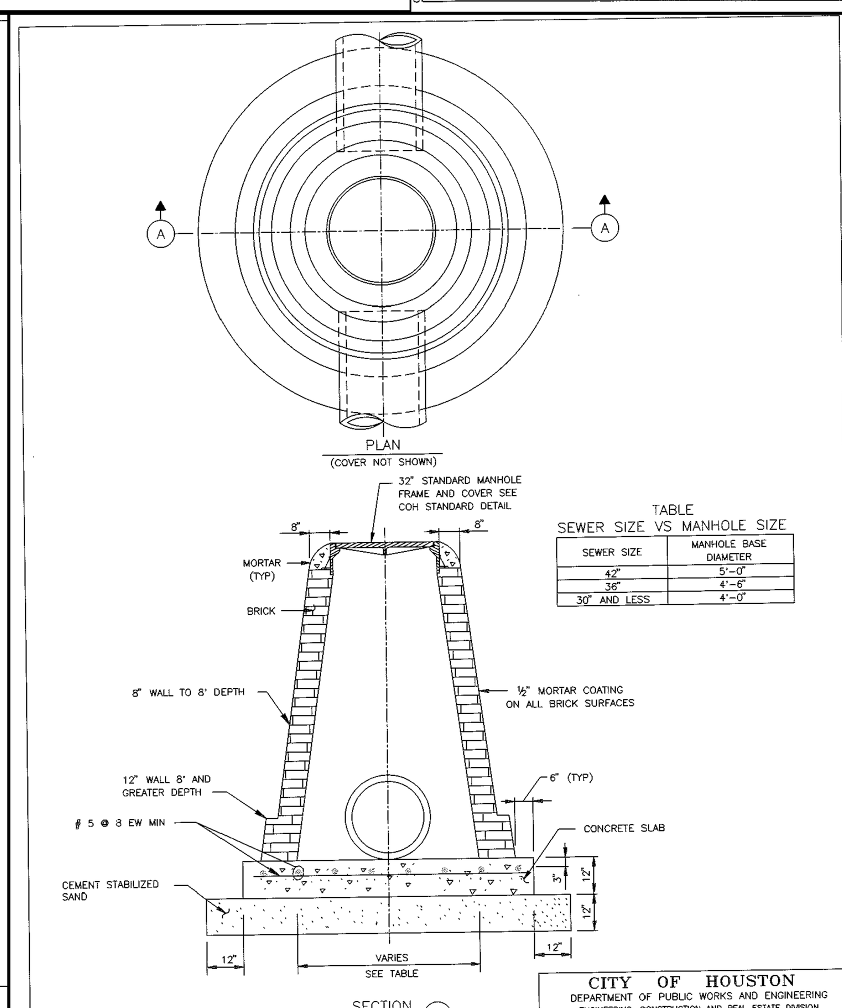

TABLE
SEWER SIZE VS MANHOLE SIZE

SEWER SIZE	MANHOLE BASE DIAMETER
42"	5'-0"
36"	4'-6"
30" AND LESS	4'-0"

CITY OF HOUSTON
DEPARTMENT OF PUBLIC WORKS AND ENGINEERING
ENGINEERING, CONSTRUCTION AND REAL ESTATE DIVISION
STORM SEWER
MANHOLE TYPE "C" FOR 42" DIAMETER RCP AND SMALLER
(NOT TO SCALE)
APPROVED BY: CITY ENGINEER | APPROVED BY: DIRECTOR OF PUBLIC WORKS AND ENGINEERING
EFF DATE: OCT-01-2002 | DWG NO: 02081-01

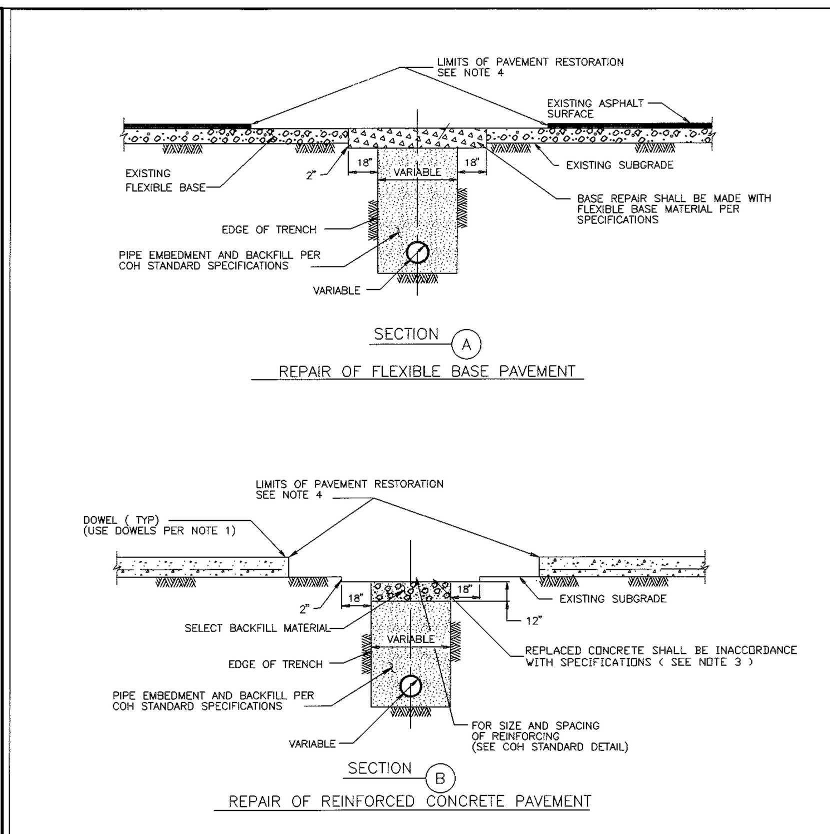

NOTE:

1. EXPOSE 15" OF REINFORCING STEEL AT PROPOSED SAWED JOINT. IF NO REINFORCING STEEL EXISTS, USE HORIZONTAL DOWELS. HORIZONTAL DOWELS SHALL BE # 6 BARS, 24" LONG, 24" C-C, DRILLED AND EMBEDDED 8" INTO THE CENTER OF THE EXISTING SLAB. WITH "PO ROC" OR EQUAL.
2. IF REINFORCED CONCRETE IS OVERLAYED WITH ASPHALT, REPLACE WITH 2" MIN HMAC SURFACING.
3. REFER TO STANDARD DETAIL 02751-01 FOR REINFORCING STEEL REQUIREMENTS
4. REFER TO STANDARD DETAIL 02951-01 FOR PAVEMENT RESTORATION LIMITS.

CITY OF HOUSTON
DEPARTMENT OF PUBLIC WORKS AND ENGINEERING
ENGINEERING, CONSTRUCTION AND REAL ESTATE DIVISION
PAVEMENT REPAIR DETAILS FOR STREET CUTS
(NOT TO SCALE)
APPROVED BY: CITY ENGINEER | APPROVED BY: DIRECTOR OF PUBLIC WORKS AND ENGINEERING
EFF DATE: OCT-01-2002 | DWG NO: 02902-01

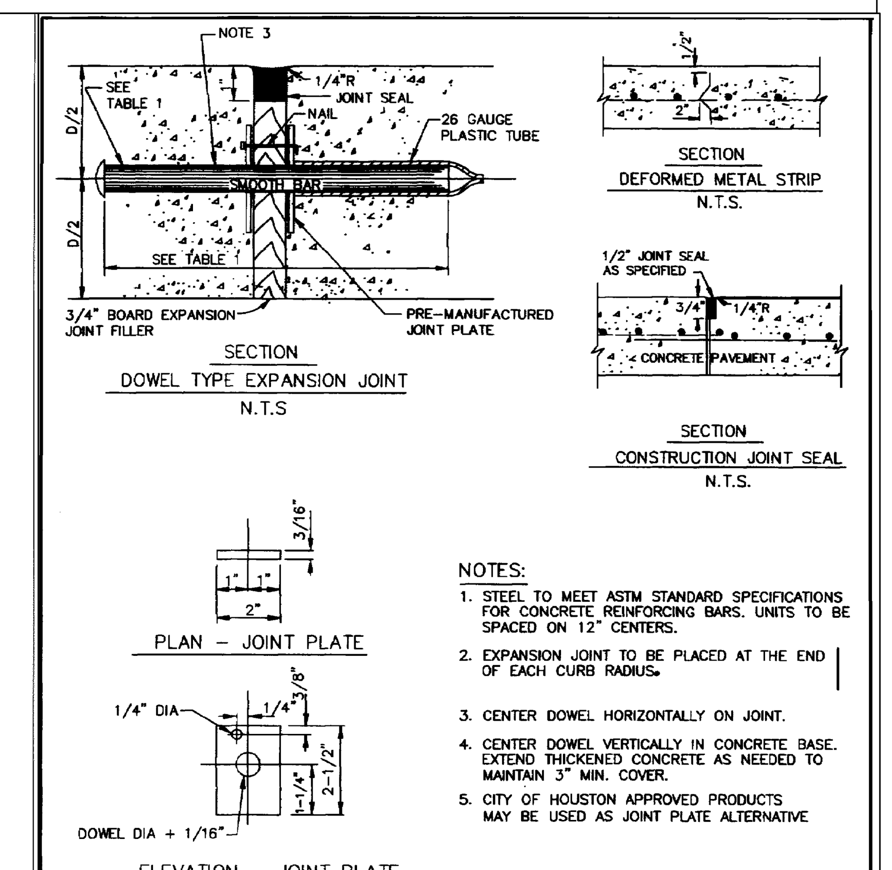

NOTES:

1. STEEL TO MEET ASTM STANDARD SPECIFICATIONS FOR CONCRETE REINFORCING BARS. UNITS TO BE SPACED ON 12" CENTERS.
2. EXPANSION JOINT TO BE PLACED AT THE END OF EACH CURB RADIUS.
3. CENTER DOWEL HORIZONTALLY ON JOINT.
4. CENTER DOWEL VERTICALLY IN CONCRETE BASE. EXTEND THICKENED CONCRETE AS NEEDED TO MAINTAIN 3" MIN. COVER.
5. CITY OF HOUSTON APPROVED PRODUCTS MAY BE USED AS JOINT PLATE ALTERNATIVE

TABLE 1

PAVEMENT THICKNESS (IN)	DOWEL SIZES AND SPACINGS		
	DIAMETER (IN)	LENGTH (IN)	SPACING (IN)
6	3/4	18	12
7	1	18	12
8	1	18	12
9	1 1/4	18	12
10	1 1/4	18	12
11	1 1/4	18	12
12	1 1/4	18	12

CITY OF HOUSTON
DEPARTMENT OF PUBLIC WORKS AND ENGINEERING
ENGINEERING, CONSTRUCTION AND REAL ESTATE DIVISION
PAVEMENT EXPANSION AND CONSTRUCTION JOINT DETAILS
(NOT TO SCALE)
APPROVED BY: CITY ENGINEER | APPROVED BY: DIRECTOR OF PUBLIC WORKS AND ENGINEERING
EFF DATE: June-01-2003 | DWG NO: 02752-01

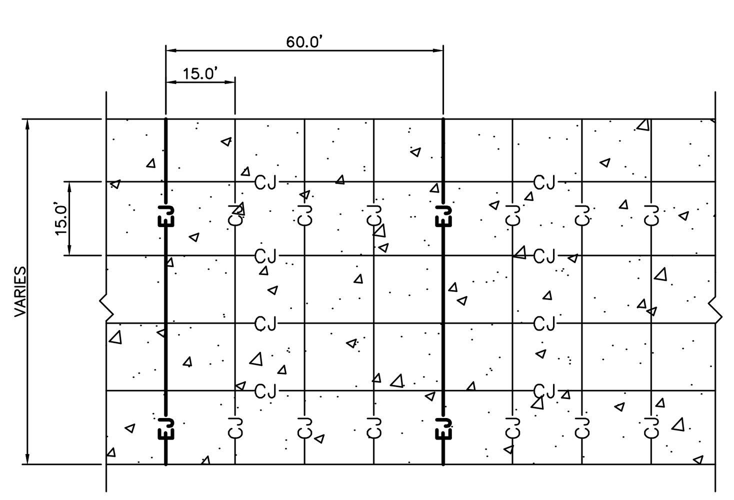

NOTE:
TYPICAL THROUGHOUT CONCRETE PAVEMENT SECTION ONLY UNLESS SHOWN OTHERWISE IF SAWCUT, CONTROL JOINTS SHOULD BE CUT WITHIN 12 TO 24 HOURS OF CONCRETE PLACEMENT. CJ SPACING SHALL BE 12.5' FOR PARKING AREAS

EXPANSION JOINT & CONTROL JOINT DETAIL
NO SCALE

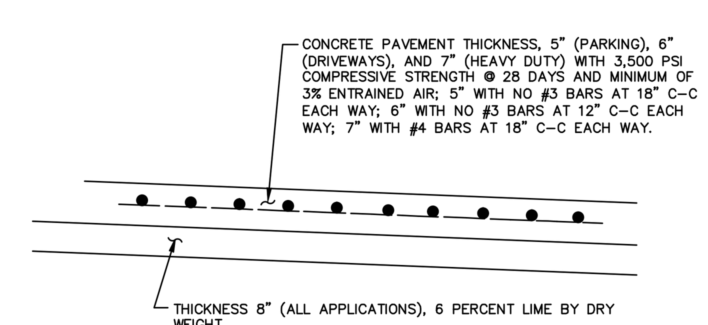

CONCRETE PAVEMENT SECTION
NO SCALE

FBC Engineering Approval

ISSUE FOR BID 04/07/2026

SLI DESIGN, INC.
ARCHITECTURE • PLANNING • INTERIOR DESIGN
15810 Park Ten Place Suite 300
Houston, TX 77084
713-465-4650
www.thesligroup.com

WD Engineering
TBPE NO F-8795
410 ASBURY STREET
HOUSTON, TEXAS 77007
713.301.4922 OFFICE
WDENGINEERING.COM

04/07/2026
STATE OF TEXAS
WILLIAM DAVIS WILKINSON
85626
LICENSED PROFESSIONAL ENGINEER

Shell Federal Credit Union
Katy Fulshear
26620 FM 1093
Katy, Texas 77494

MISCELLANEOUS DETAILS

C1.06

Date: Apr 07, 2026
File: C:\Google Drive\WD Engineering\Projects\SLI\SLI143\C06pavSLI143.dwg