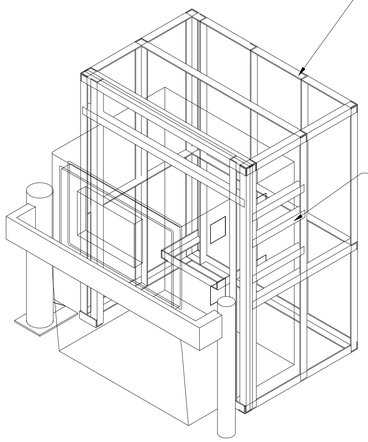

2 3D Ortho Structure A

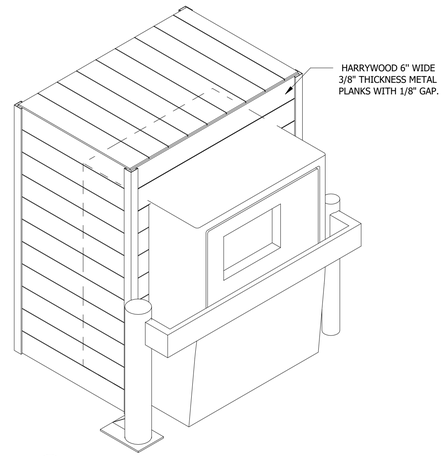

3 3D Ortho B

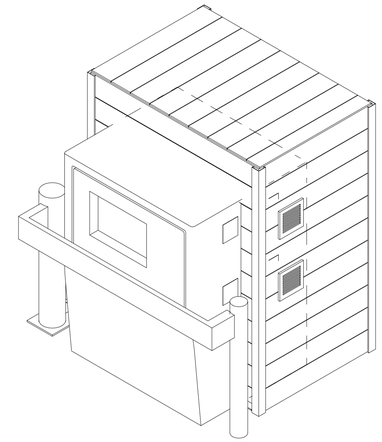

1 3D Ortho

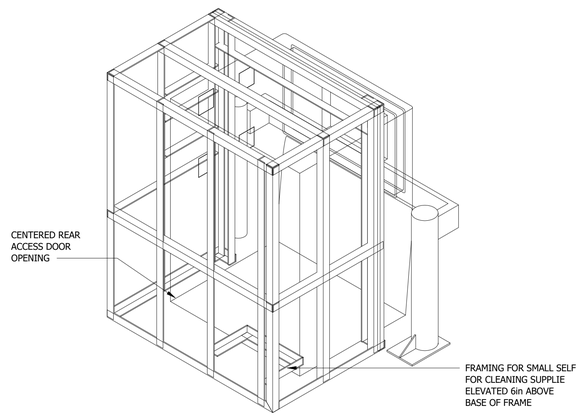

9 3D Ortho Structure B

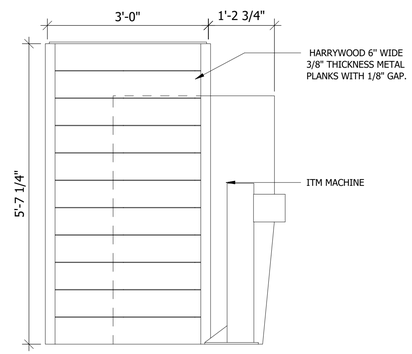

6 Elevation Left

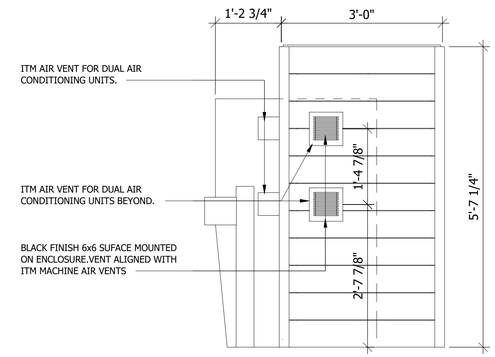

4 Elevation Right

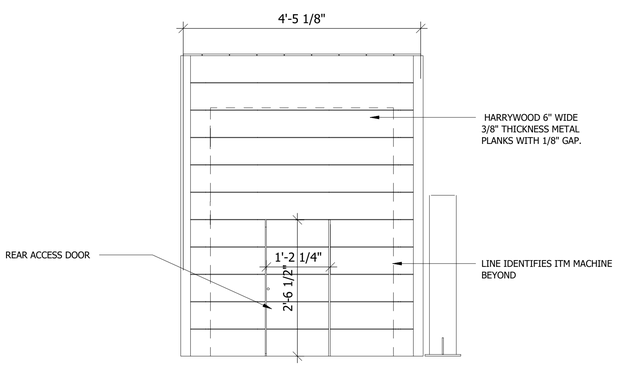

8 Elevation Back

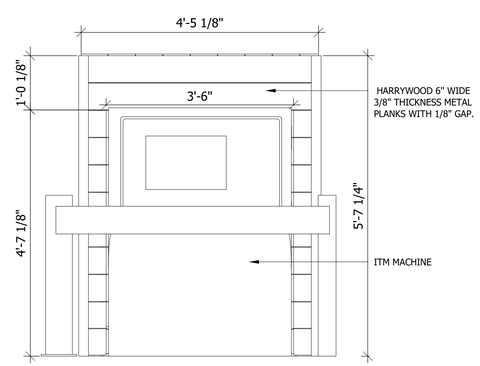

5 Elevation Front

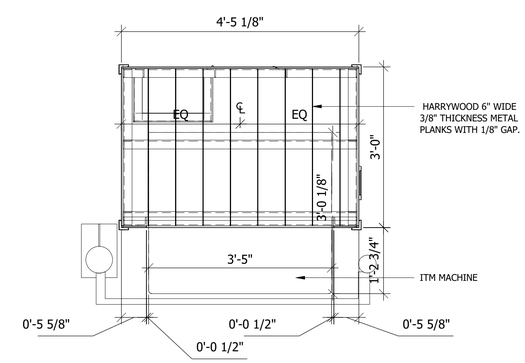

7 Elevation Top

SLI DESIGN, INC.
ARCHITECTURE PLANNING INTERIOR DESIGN
15810 PARK TEN PLACE, SUITE 300
HOUSTON, TEXAS 77084
713-465-4650
www.sligroup.com
© COPYRIGHT

Neches FCU - Little Cypress ITM

7125 HWY 87 N
ORANGE, TX 77630

Project Number : 8976

	DATE
ISSUED FOR CLIENT APPROVAL	02.20.2026
ISSUED FOR BIDDING	03.03.2026
ISSUED FOR PERMIT	03.03.2026
ISSUED FOR CONSTRUCTION	

REVISIONS

MARK	DESCRIPTION	DATE

The information, ideas, designs, details, layouts, techniques, features, arrangements, plans, sequences, dimensions, allowances, tolerances, conceptions, specifications, intentions, technology or embodiments, as illustrated, arranged, displayed, noted, recorded, indicated, represented, disclosed, evidenced, detailed or otherwise reduced to tangible form hereon, either expressly, inherently or by implication, are the confidential and proprietary information of SLI Design, Inc., and shall not be used for any purpose other than the specific project or undertaking identified on the drawing title block or legend for which they are and have been prepared by SLI Design, Inc. Any other reproduction, disclosure or use of any portion of the confidential and proprietary information of SLI Design, Inc., shall be a breach of the obligation of confidence created by the acceptance of this drawing from SLI Design, Inc. for a specific project or Contract. Any copying, duplicating, reproducing, utilization, alteration, modification, revision or change to this drawing, is expressly prohibited unless done with the prior written consent or approval of SLI Design, Inc., and shall not be undertaken without receipt of such prior written approval. This drawing is loaned by SLI Design, Inc., for the limited purpose of complying with a specific Contract. The drawing remains the property of SLI Design, Inc., and shall be returned upon request or completion of the contract, unless specifically authorized by Contract, under which it was loaned.

PRINT DATE: 3/3/2026 12:10:37 PM

REGISTERED ARCHITECT
THOMAS B. LAWLER
14288
STATE OF TEXAS
03/03/2026

DRAWING TITLE
ITM ENCLOSURE

DRAWN BY	RG	SHEET NO.
CHECKED BY	BL	SP-2.10
APPROVED BY	TB	

X:\Neches FCU - Little Cypress ITM\Drawings\Revit\Neches FCU - Little Cypress ITM_ V26_25.1204.rvt