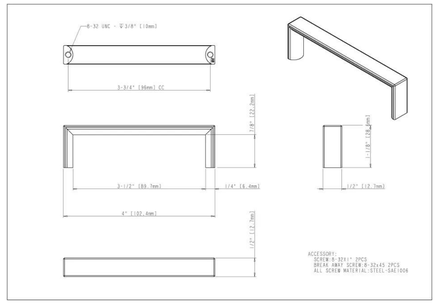

MFG - HARDWARE RESOURCES

SERIES - WALKER 2 CABINET PULL

ITEM # - 727-96MB

FINISH - MATTE BLACK

SIZE - 96MM CENTER TO CENTER

CABINET PULL

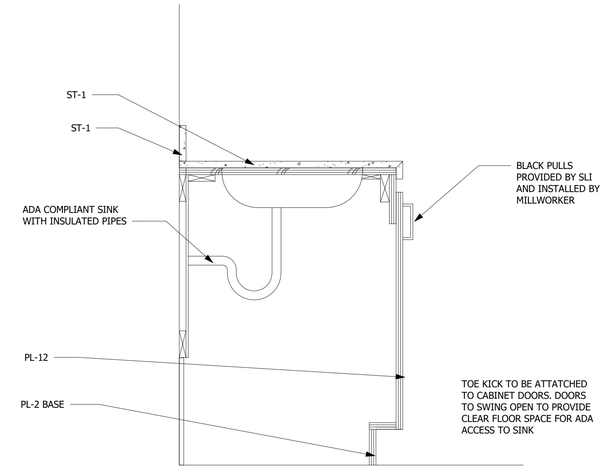

4 BASE CABINET - ADA SINK - TOE KICK
1 1/2" = 1'-0"

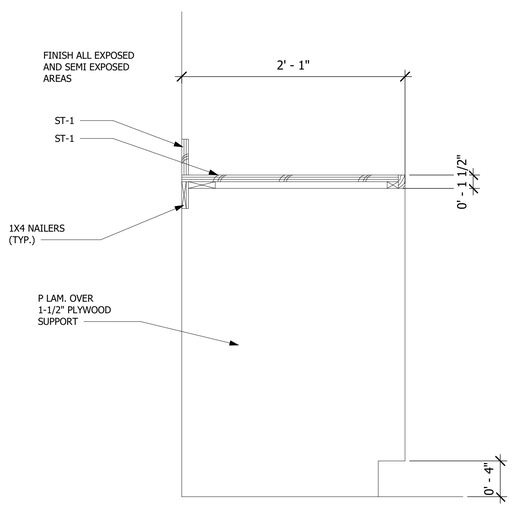

3 TYPICAL COUNTER
1 1/2" = 1'-0"

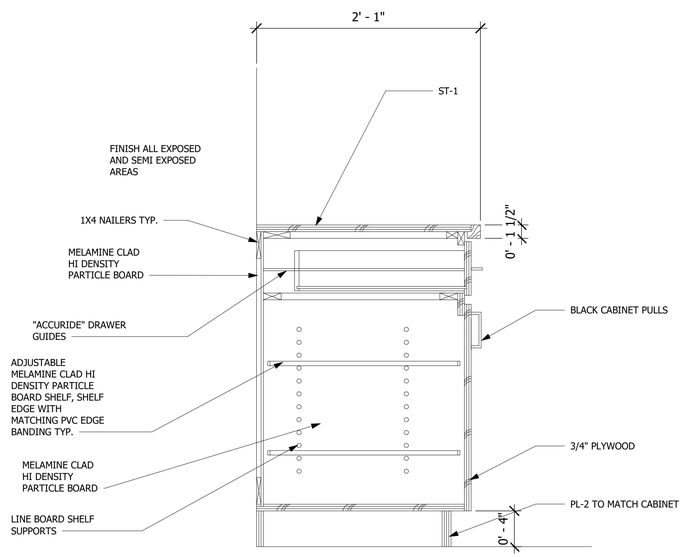

2 BASE CABINET W DRAWER & HANDLE
1 1/2" = 1'-0"

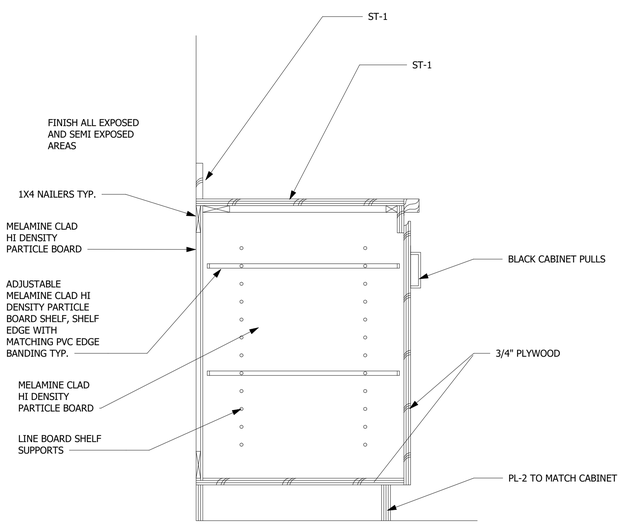

1 BASE CABINET - HANDLE
1 1/2" = 1'-0"

SLI DESIGN, INC.

ARCHITECTURE PLANNING INTERIOR DESIGN

15810 PARK TEN PLACE, SUITE 300
HOUSTON, TEXAS 77084
713-465-4650
www.sligroup.com

© COPYRIGHT

ACORN golf club

ACORN GOLF CLUB
13825 Timber Forest Dr, Houston, TX 77044
SUITE #103

Project Number : 8982

	DATE
ISSUED FOR CLIENT APPROVAL	03.30.2026
ISSUED FOR BIDDING	04.10.2026
ISSUED FOR PERMIT	
ISSUED FOR CONSTRUCTION	

REVISIONS

MARK	DESCRIPTION	DATE

The information, ideas, designs, details, layouts, techniques, features, arrangements, plans, sequences, dimensions, allowances, tolerances, conceptions, specifications, intentions, technology or embodiments, as illustrated, arranged, displayed, noted, recorded, indicated, represented, disclosed, evidenced, detailed or otherwise reduced to tangible form hereon, either expressly, inherently or by implication, are the confidential and proprietary information of SLI Design, Inc., and shall not be used for any purpose other than the specific project or undertaking identified on the drawing title block or legend for which they are and have been prepared by SLI Design, Inc. Any other reproduction, disclosure or use of any portion of the confidential and proprietary information of SLI Design, Inc., shall be a breach of the obligation of confidence created by the acceptance of this drawing from SLI Design, Inc. for a specific project or Contract. Any copying, duplicating, reproducing, utilization, alteration, modification, revision or change to this drawing, is expressly prohibited unless done with the prior written consent or approval of SLI Design, Inc., and shall not be undertaken without receipt of such prior written approval. This drawing is loaned by SLI Design, Inc., for the limited purpose of complying with a specific Contract. The drawing remains the property of SLI Design, Inc., and shall be returned upon request or completion of the contract, unless specifically authorized by Contract, under which it was loaned.

PRINT DATE: 4/10/2026 10:05:01 AM

REGISTERED ARCHITECT
THOMAS P. BAUER
14288
STATE OF TEXAS

04/10/2026

DRAWING TITLE
MILLWORK DETAILS

DRAWN BY	RG	SHEET NO.
CHECKED BY	BL	A-11.00
APPROVED BY	TB	

C:\Users\PC-0122\Documents\Acorn Golf Club_VR5_2026_260310_plinthvall.rvt